QUADAX®
HIGH QUALITY VALVES - MADE FOR EXTREME APPLICATIONS

www.quadax.de

QUADAX®
MADE FOR THE EXTREME

Content

Company profile	04 - 07
Quadax® production	08 - 09
Design principle	10 - 11
Highlights	12 - 13
Benefits	14 - 15
Product portfolio	16 - 27
Quality	28 - 29
Applications	30
Made for the extreme	31

QUADAX®
MEMBER OF THE
müller co-ax® group

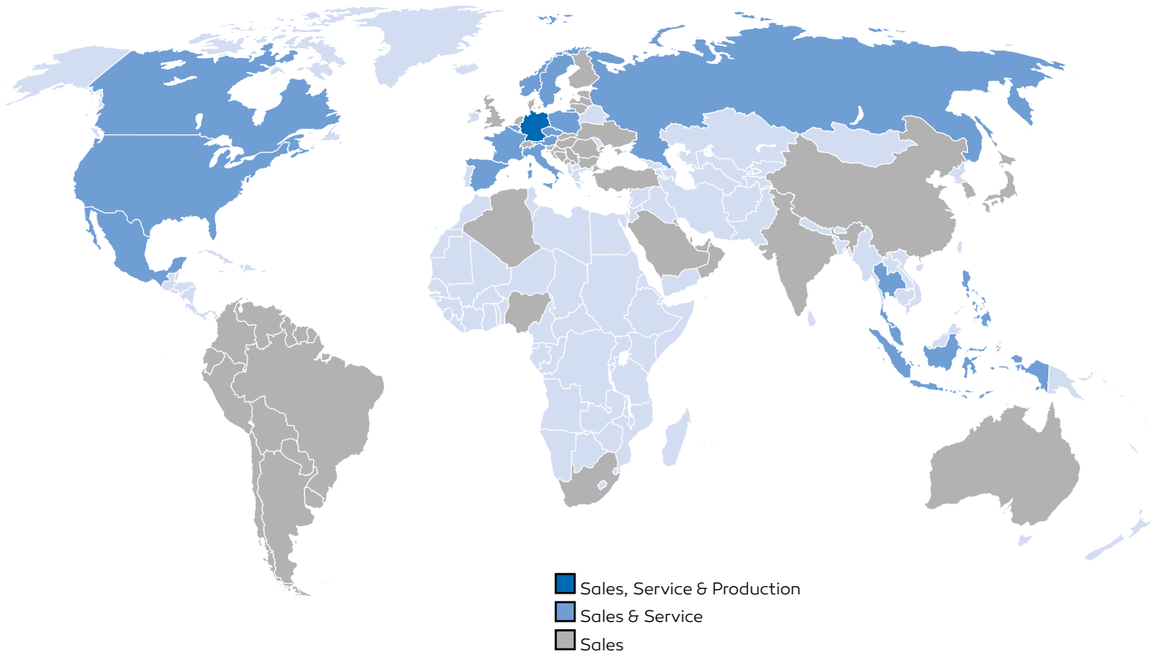

QUADAX® GLOBAL SALES & SERVICE NETWORK

Our headquarters are located in South Germany. But our products are used all over the world - wherever extreme pressure or temperature ranges are required. For our customers, we combine the values and flexibility of a family-owned company with a long-term perspective and the professionalism of a global player.

THE müller co-ax® group
A FAMILY OWNED COMPANY

müller quadax gmbh –
A COMPANY OF THE müller-co-ax® group

Over 50 years of muller co-ax®. A company that has grown from the humblest of beginnings to become a highly reputed valve technology enterprise within the industry. We are synonymous for innovation and individuality, for confidence and quality and for experience and reliability in valve technology. This has been the case since the beginning of our dynamic development and it will continue to stay that way.

More than 50 years of experience does, however, also bring responsibility with it: for our company, for what we have achieved with our employees and of course for our customers.

MADE IN GERMANY

The Quadax® 4-offset butterfly valves are produced on modern, fully equipped 5-axis machining centres - 100% in Germany.
This ensures that we can always achieve and secure the highest quality standards. Quadax® is therefore the perfect solution for demanding applications with high safety requirements.

FAMILY OWNED COMPANY

For our customers, we combine the values and flexibility of a family-owned company with a long-term perspective and the professionalism of a global player. These are just three of the reasons to work with us.
We look forward to hearing from you!

QUADAX® PRODUCTION

In our production, quality, expertise and experience all come together – **Made in Germany**.

Our innovative butterfly valves are produced on modern, fully equipped 5-axis machining centres. Our manufacturing facilities cover an area of approximately 10,000 square metres with production, assembly and storage. We also have 50 square metres of state-of-the-art testing facilities. Every single work step, from the technical drawing to the final inspection before delivering to the customer, is subject to procedure defined in precision. This ensures that we can always achieve our own high quality standards.

Only the best equipment can provide the basis for products that set standards!

High Vertical Integration - 100% Made in Germany

High quality production on modern 5-axis machining centres

Assembly made by qualified employees

All valves are 100% tested

Highest flexibility thanks to our own paint shop

DESIGN PRINCIPLE

In contrast to the elliptical seal geometry of conventional triple offset valves, the Quadax® features a completely circular seal geometry. Thanks to this unique four offset construction the Quadax® valves offer 100% tightness even under the most extreme pressure and temperature requirements.

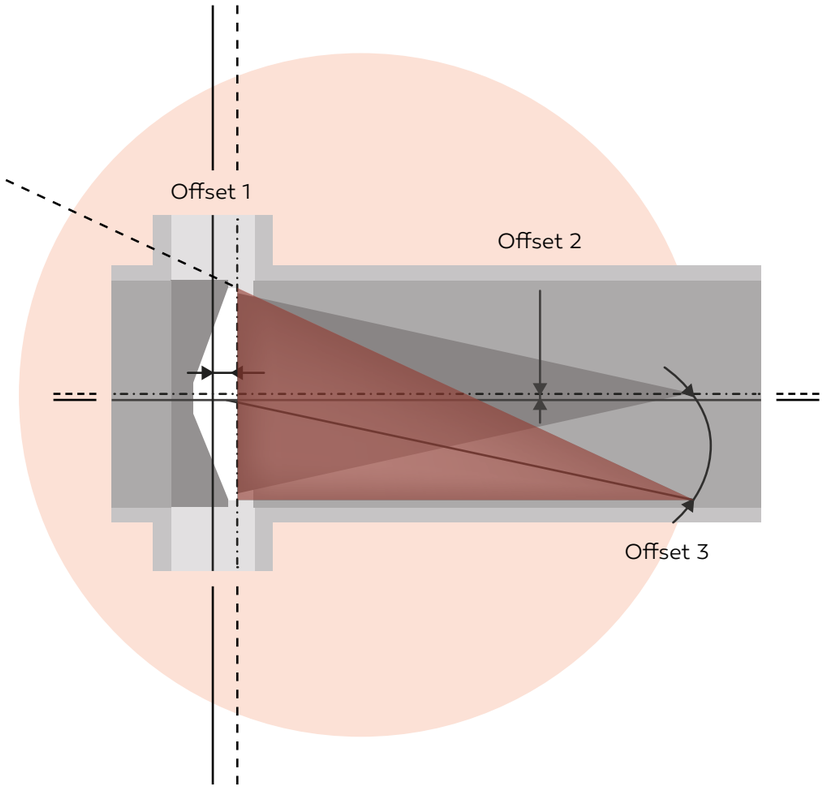

CENTRIC BUTTERFLY VALVE

The turning point is at the centre of the seat and at the centre of the pipe.

→ Only elastomer seals are possible.

SINGLE OFFSET BUTTERFLY VALVE

The turning point of the disc is offset along the direction of the pipe.

→ 100 % friction between seat and seal
→ Increased torque and wear

DOUBLE OFFSET BUTTERFLY VALVE

The turning point of the disc is also offset from the centre of the pipe towards the outer edge.

→ Approx. 30 % friction between seat and seal

TRIPLE OFFSET BUTTERFLY VALVE

The seat has a conical shape. The tip of the cone is offset from the centre of the pipe towards the outer edge. A circular cone results in an elliptical narrow seat in the valve body.

→ Approx. 2-5 % friction between seat and seal

COMPARISON

FOUR OFFSET BUTTERFLY VALVE

On the four offset butterfly valve, the output cone used is elliptical.

The section under a particular angle results in a circular and therefore larger sealing area.

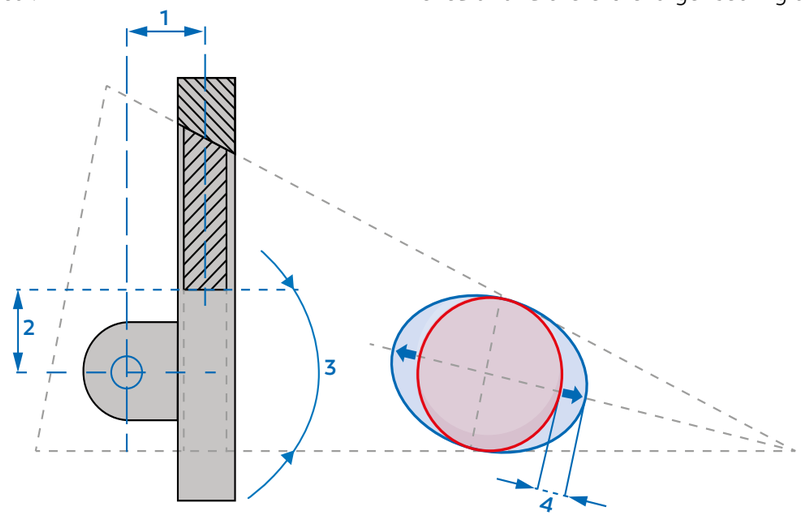

Four Offset QUADAX® Butterfly Valves

The 4 offset butterfly valve offers a completely round seat and sealing geometry

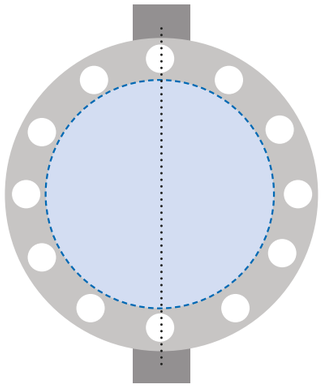

- Friction-free
- Higher KV/CV values
- Highest tightness/No leaks (even in the most extreme conditions)
- Lower torques

VS

Conventional triple Offset Butterfly Valves

A conventional triple offset valve functions with an elliptical seat and sealing geometry

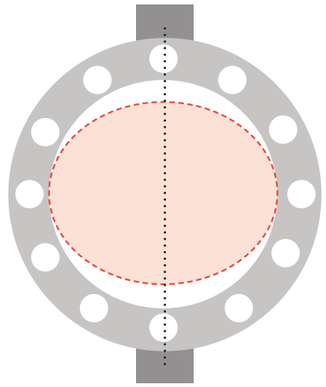

- Wear due to friction
- Few leaks
- Maintenance-prone

HIGHLIGHTS

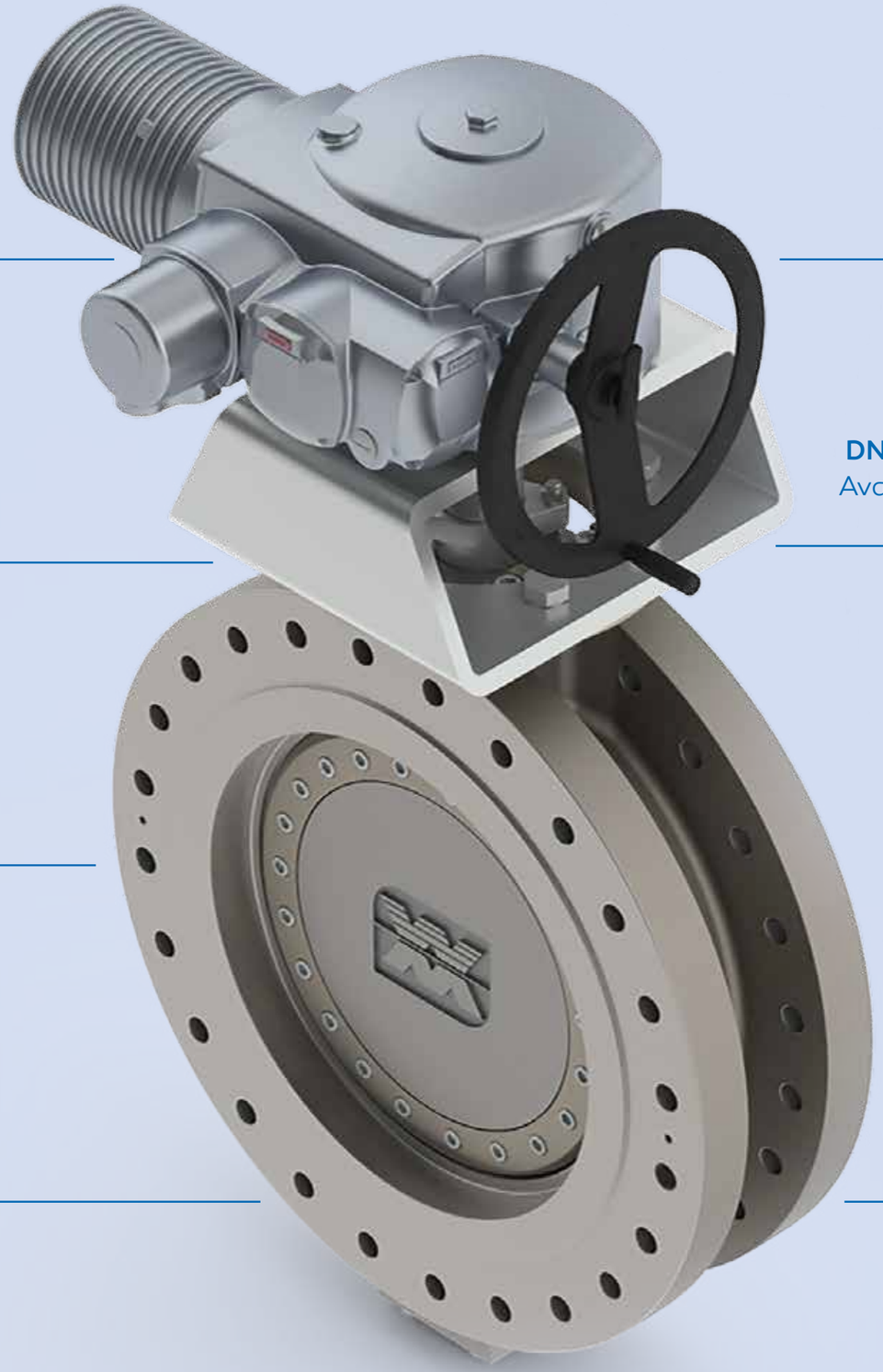

TEMPERATURE RANGE
from –270°C to +800°C
from -454°F to +1472°F

ZERO LEAKAGES
also in cryogenic applications

TIGHT IN BOTH DIRECTIONS
– up to full pressure

DN 1800 (72”) AND 160 BAR (CLASS 1500, 2320 PSI)
Available up to DN 1800 mm and above / Available up to 160 bar and above

FLOATING DISC DESIGN
Highest tightness even in high Δt

METAL SEALS
All metal seals possible

NO MOVEMENT
No movement between disc and seal – absolute tightness between seal and disc

MINIMISED DEAD-LEG AREA
Dead-leg area minimised thanks to four offset design, higher Kv/Cv value and less accumulation of dirt

BENEFITS

4 WINS

EXTREME TEMPERATURE RANGES

- Same wall thickness on sealing area
- Extreme temperatures from –270°C to +800°C
- Large temperature differences are easy to handle

INCREASED OPERATION SAFETY

- Totally friction-free on sealing area
- Reduced risk of failure
- No wear on sealing area
- Longer service life

SUPERIOR TIGHTNESS

- Meets the highest tightness requirements
- Bubble-tight even in cryo-genic applications
- Innovative and patented sealing design

REDUCED OPERATING COSTS

- Higher Kv/Cv values
- Lower nominal pipe diameters
- Lower torques
- Reduced maintenance costs

PRODUCT PORTFOLIO

01

Quadax®– double flange

Butterfly valve:	bare shaft end
Pressure range:	PN 0-160 bar
Nominal diameter:	DN 50-1800 mm
Connection:	flange

02

Quadax®– lug type

Butterfly valve:	bare shaft end
Pressure range:	PN 0-63 bar
Nominal diameter:	DN 50-1800 mm
Connection:	flange

03

Quadax®– gate valve replacement

Butterfly valve:	bare shaft end
Pressure range:	PN 0-160 bar
Nominal diameter:	DN 80-1800 mm
Connection:	flange

04

Quadax®– buttweld

Butterfly valve:	bare shaft end
Pressure range:	PN 0-160 bar
Nominal diameter:	DN 80-1800 mm
Connection:	welding ends

SEALS

Laminated stainless steel

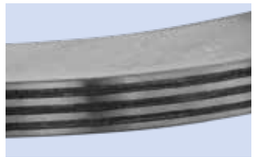

Laminated graphite

Inconel O-ring

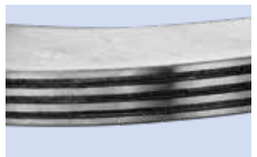

Inconel graphite

For more information
please scan the QR-code

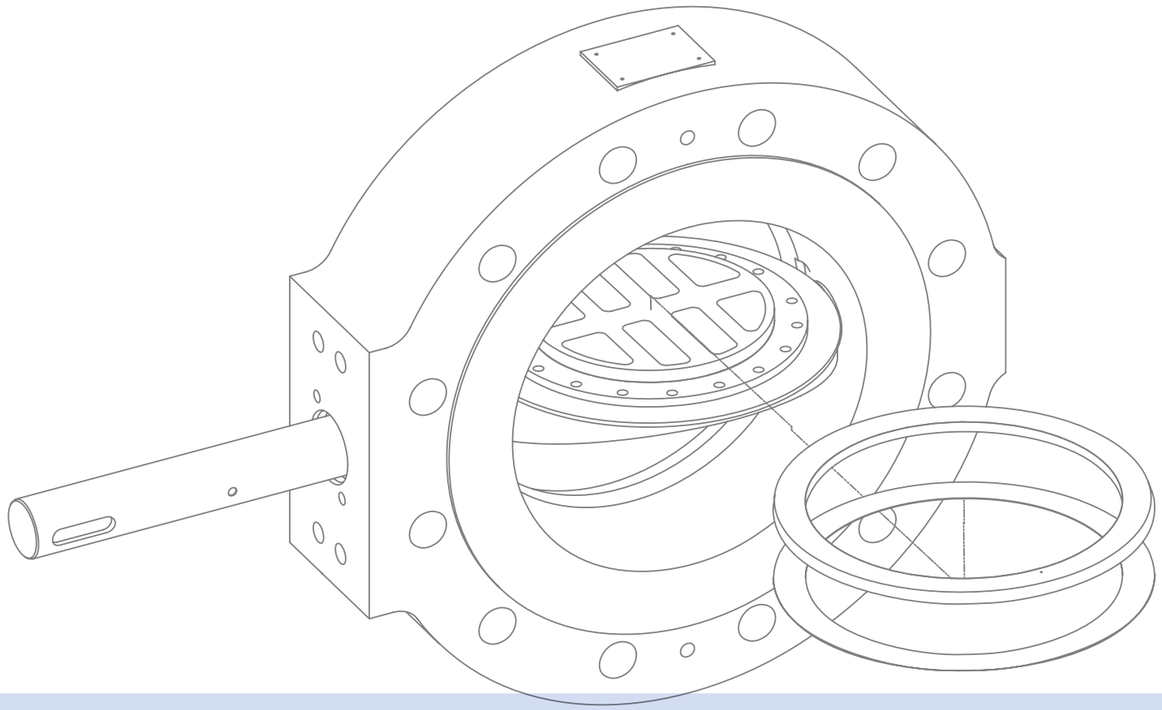

05

Quadax®– top entry

Butterfly valve:	bare shaft end
Pressure range:	PN 0-160 bar
Nominal diameter:	DN 150-1000 mm
Connection:	welding ends

QUADAX® BUTTERFLY VALVE DOUBLE FLANGE VERSION

body details

butterfly valve:	bare shaft
pressure range:	PN 0-160 bar
orifice:	DN 50-1000 mm
connection:	flange
body materials:	carbon steel, stainless steel, special material (duplex, Inconel, bronze)
valve seat materials:	Inconel, others on request
seal materials:	graphite / stainless steel, Inconel, stainless steel, PTFE

⚠ The above-stated body materials refer only to the valve port connections that come in contact with the media!

details needed for a correct valve selection

- size
- pipe connection
- operating pressure
- flow rate
- Δp
- closing time
- media
- process temperature
- outside temperature

⚠ The valves' technical design is based on media and application requirements. This can lead to deviations from the general specifications shown on the data sheet with regards to the design, sealing materials and characteristics.

⚠ If order or application specifications are incomplete or imprecise there exists the risk of an incorrect technical design of the valve for the required application. As a consequence, the physical and / or chemical properties of the materials or seals used, may not be suitable for the intended application.

general specifications

ports	flange	PN 10 / 16 / 25 / 40 / 63 / 100 / 160
		ANSI 150 / 300 / 600 / 900
function	NC / NO / DA	depending upon actuator
pressure range	body pressure	0 to 160 bar
	Δp standard shaft	52 bar in both directions
	Δp optional shaft	100 bar in both directions
Kv value	m³/h	see table
leakage rate		1 DIN 3230
		A DIN EN 12266
		BS 6364
		Fire-safe
flow direction	A → B	as marked
switching time	s	DN/100
process- and outside temperature	standard	-10 °C to +450 °C
	with special materials	-270 °C to +800 °C
limit switches		option
approvals		PED / Fire-safe / BAM / TA Luft / ATEX in further
weight	kg	see table
additional equipment		upon request

Kv-curve

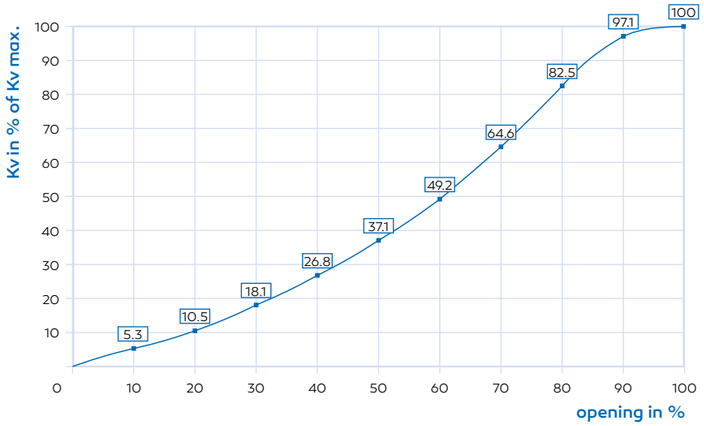

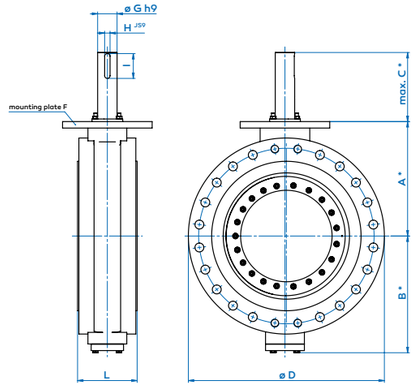

* dimensions for trim X only

dimensions

size	(mm)		**50**	**65**	**80**	**100**	**125**	**150**	**200**	**250**	**300**	**350**	**400**	**450**	**500**	**600**	**700**	**750**	**800**	**900**	**1000**
	(inches)		**2**	**2 ½**	**3**	**4**	**5**	**6**	**8**	**10**	**12**	**14**	**16**	**18**	**20**	**24**	**28**	**30**	**32**	**36**	**40**
pipe cl to mounting plate		**A**	105	128	128	162	190	203	240	279	305	325	385	405	440	530	630	630	700	830	920
pipe cl to cover screws		**B**	106	129	129	158	186	204	241	281	307	333	383	403	441	541	643	643	713	836	926
bare shaft length for direct mounting		**C**	95	95	95	125	135	145	180	180	180	280	289	300	320	320	367	367	367	398	398
bare shaft length for adapter		**C**	51	51	51	68	68	68	85	85	85	173	170	170	170	170	210	-	-	-	-
flange diameter	PN 10	**D**	165	200	200	230	250	295	352	405	455	515	565	615	670	780	895	970	1085	1115	1230
	PN 16	**D**	165	200	200	230	250	295	352	405	455	515	590	640	725	845	910	970	1085	1125	1255
	PN 25	**D**	165	200	200	230	270	295	352	425	485	550	620	680	725	845	960	1020	1085	1185	1320
	PN 40	**D**	165	200	200	230	270	295	375	450	515	585	660	680	770	908	-	-	-	-	-
	PN 63	**D**	180	215	215	250	295	345	415	470	530	600	670	-	-	-	-	-	-	-	-
	PN 100	**D**	-	230	230	265	315	355	430	505	585	655	-	-	-	-	-	-	-	-	-
	PN 160	**D**	-	230	230	265	315	355	430	515	585	-	-	-	-	-	-	-	-	-	-
	ANSI 150	**D**	165	190	190	230	-	280	352	405	485	550	590	640	700	815	927	984	1085	1168	1290
	ANSI 300	**D**	165	210	210	254	-	320	380	445	515	585	660	710	770	908	1035	1092	1149	1270	1238
	ANSI 600	**D**	165	210	210	275	-	355	420	508	560	605	685	745	815	940	1073	1130	1194	1315	1320
	ANSI 900	**D**	-	240	240	292	-	380	470	545	610	640	705	790	860	1040	1170	1230	1315	1460	1510
mounting plate F ISO 5211	(others on request)	**F**	F07	F07	F07	F10	F12	F14	F16	F16	F16	F25	F30	F30	F35	F35	F40	F40	F40	F48	F48
trim A	20 bar max.	**G**	-	-	-	-	-	-	-	-	40	45	50	55	55	70	90	90	100	110	120
	290 psi max.	**H**	-	-	-	-	-	-	-	-	12	14	14	16	16	20	25	25	28	32	32
		I	-	-	-	-	-	-	-	-	45	60	60	80	80	90	115	115	125	140	160
trim X (standard)	52 bar max.	**G**	14	18	18	20	22	32	32	40	45	55	65	70	75	90	110	110	130	150	160
	754 psi max.	**H**	5	6	6	6	6	10	10	12	14	16	18	20	20	25	32	32	32	36	40
		I	25	28	28	28	40	40	40	45	60	80	88	90	90	115	140	140	180	180	200
trim B	104 bar max.	**G**	-	-	-	-	-	-	45	55	65	75	90	95	110	130	150	150	180	190	220
	1500 psi max.	**H**	-	-	-	-	-	-	14	16	18	20	25	25	32	32	36	36	45	45	50
		I	-	-	-	-	-	-	60	80	88	90	115	125	140	180	180	180	220	250	280
trim C	155 bar max.	**G**		20	20	28	32	40	50	65	75	90	110	110	130	150	170	170	200	230	250
	2250 psi max.	**H**		6	6	8	10	12	14	18	20	25	32	32	32	36	40	40	45	50	56
		I		28	28	40	40	45	60	88	90	115	140	140	180	180	200	200	240	280	320
ISO 5752 R13 / DIN 3202 F16	PN 10/16/25/40	**L**	108	114	114	127	-	140	152	165	178	190	216	222	229	267	292	318	318	330	410
ISO 5752 R13 / DIN 3202 F16	ANSI 150/300	**L**	108	114	114	127	-	140	152	165	178	190	216	222	229	267	292	318	318	330	410
ISO 5752 R14 / DIN 3202 F4	PN 63/100/160	**L**	150	180	180	190	200	210	230	250	270	290	310	330	350	390	430	470	470	510	550
ISO 5752 R14 / DIN 3202 F4	ANSI 600/900	**L**	150	180	180	190	200	210	230	250	270	290	310	330	350	390	430	470	470	510	550
Kv-value (m³/h)	**trim A**	Δp max. 20 bar		-	-	-	-	-	-	-	-	3837	5478	7944	10735	12921	20651	25473	32661	36123	47565	56131
	trim X	Δp max. 52 bar		38	118	118	258	418	654	1445	2451	3720	5120	7321	9986	12118	19253	23081	30015	33343	43215	51398
	trim B	Δp max. 104 bar		-	-	-	-	-	-	1254	2123	3180	4459	6282	8738	10245	16458	19826	22286	28632	38954	44444
	trim C	Δp max. 155 bar			101	101	208	344	576	1164	1916	2926	3962	5659	7989	9442	15002	18231	21026	26779	34693	40870
cv-value (gal/min)	**trim A**	Δp max. 290 psi		-	-	-	-	-	-	-	-	4462	6370	9237	12483	15024	24013	29620	37978	42003	55308	65269
	trim X	Δp max. 754 psi		44	137	137	300	486	760	1680	2850	4314	5953	8513	11612	14091	22387	26838	31702	38771	50250	59765
	trim B	Δp max. 1500 psi		-	-	-	-	-	-	1458	2469	3698	5185	7305	10160	11913	19137	23053	25914	33293	45295	51679
	trim C	Δp max. 2250 psi		-	117	117	242	400	670	1353	2228	3402	4607	6580	9290	10979	17444	21199	24658	31138	40341	47523
weight (standard)	(approx. kg)			11	18	18	27	38	44	78	111	160	235	334	349	476	736	862	1017	1138	1475	2162

QUADAX® BUTTERFLY VALVE LUG TYPE VERSION

body details

butterfly valve:	bare shaft
pressure range:	PN 0-63 bar
orifice:	DN 50-1000 mm
connection:	flange
body materials:	carbon steel, stainless steel, special material (duplex, Inconel, bronze)
valve seat materials:	Inconel, others on request
seal materials:	graphite / stainless steel, Inconel, stainless steel, PTFE

The above-stated body materials refer only to the valve port connections that come in contact with the media!

details needed for a correct valve selection

- size
- pipe connection
- operating pressure
- flow rate
- Δp
- closing time
- media
- process temperature
- outside temperature

The valves' technical design is based on media and application requirements. This can lead to deviations from the general specifications shown on the data sheet with regards to the design, sealing materials and characteristics.

If order or application specifications are incomplete or imprecise there exists the risk of an incorrect technical design of the valve for the required application. As a consequence, the physical and / or chemical properties of the materials or seals used, may not be suitable for the intended application.

general specifications

ports	flange	PN 10 / 16 / 25 / 40 / 63
		ANSI 150 / 300 / 600
function	NC / NO / DA	depending upon actuator
pressure range	body pressure	0 to 63 bar
	Δp standard shaft	52 bar in both directions
Kv value	m³/h	see table
leakage rate		1 DIN 3230
		A DIN EN 12266
		BS 6364
		Fire-safe
flow direction	A → B	as marked
switching time	s	DN/100
process- and outside temperature	standard	-10 °C to +450 °C
	with special materials	-270 °C to +800 °C
limit switches		option
approvals		PED / Fire-safe / BAM / TA Luft / ATEX in further
weight	kg	see table
additional equipment		upon request

Kv-curve

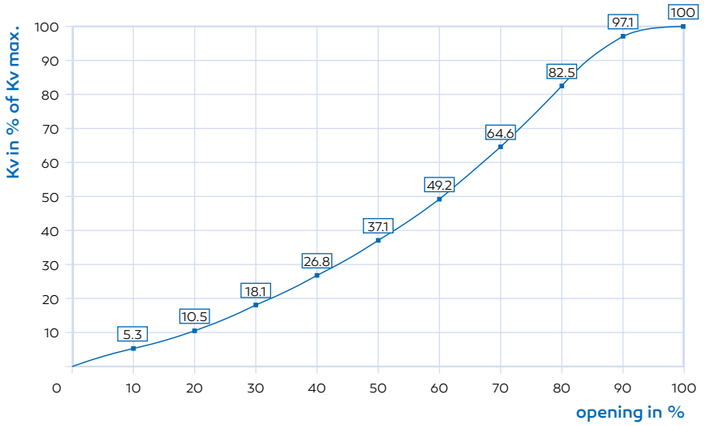

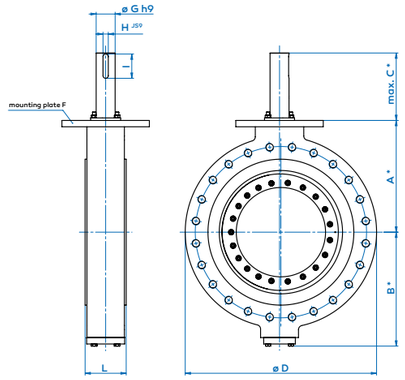

* dimensions for trim X only

dimensions

size	(mm)		50	65	80	100	125	150	200	250	300	350	400	450	500	600	700	750	800	900	1000
	(inches)		2	2½	3	4	5	6	8	10	12	14	16	18	20	24	28	30	32	36	40
pipe cl to mounting plate		A	105	128	128	162	190	203	240	279	305	325	385	405	440	530	630	630	700	830	920
pipe cl to cover screws		B	106	129	129	158	186	204	241	281	307	333	383	403	441	541	643	643	713	836	926
bare shaft length for direct mounting		C	95	95	95	125	135	145	180	180	180	280	289	300	320	320	367	367	367	398	398
bare shaft length for adapter		C	51	51	51	68	68	68	85	85	85	173	170	170	170	170	210	-	-	-	-
flange diameter	PN 10	D	165	200	200	230	250	295	352	405	455	515	565	615	670	780	895	970	1085	1115	1230
	PN 16	D	165	200	200	230	250	295	352	405	455	515	590	640	725	845	910	970	1085	1125	1255
	PN 25	D	165	200	200	230	270	295	352	425	485	550	620	680	725	845	960	1020	1085	1185	1320
	PN 40	D	165	200	200	230	270	295	375	450	515	585	660	680	770	908	-	-	-	-	-
	PN 63	D	180	215	215	250	295	345	415	470	530	600	670	-	-	-	-	-	-	-	-
	ANSI 150	D	165	190	190	230	-	280	352	405	485	550	590	640	700	815	927	984	1085	1168	1290
	ANSI 300	D	165	210	210	254	-	320	380	445	515	585	660	710	770	908	1035	1092	1149	1270	1238
	ANSI 600	D	165	210	210	275	-	355	420	508	560	605	685	745	815	940	1073	1130	1194	1315	1320
mounting plate F ISO 5211	(others on request)	F	F07	F07	F07	F10	F12	F14	F16	F16	F16	F25	F30	F30	F35	F35	F40	F40	F40	F48	F48
trim A	20 bar max.	G	-	-	-	-	-	-	-	-	40	45	50	55	55	70	90	90	100	110	120
	290 psi max.	H	-	-	-	-	-	-	-	-	12	14	14	16	16	20	25	25	28	32	32
		I	-	-	-	-	-	-	-	-	45	60	60	80	80	90	115	115	125	140	160
trim X (standard)	52 bar max.	G	14	18	18	20	22	32	32	40	45	55	65	70	75	90	110	110	130	150	160
	754 psi max.	H	5	6	6	6	6	10	10	12	14	16	18	20	20	25	32	32	32	36	40
		I	25	28	28	28	40	40	40	45	60	80	88	90	90	115	140	140	180	180	200
DIN 3202 K3	PN 10/16/25/40/63	L	43	64	64	64	70	76	89	114	114	127	140	152	152	178	229	241	241	241	300
API 609	ANSI 150	L	43	48	48	54	-	57	64	71	81	92	102	114	127	154	-	-	-	-	-
	ANSI 300	L	43	48	48	54	-	59	73	83	92	117	133	149	159	181	-	-	-	-	-
	ANSI 600	L	43	54	54	64	-	78	102	117	140	155	178	200	216	232	-	-	-	-	-
Kv-value (m³/h) **trim A**	Δp max. 20 bar		-	-	-	-	-	-	-	-	3837	5478	7944	10735	12921	20651	25473	32661	36123	47565	56131
Kv-value (m³/h) **trim X**	Δp max. 52 bar		38	118	118	258	418	654	1445	2451	3720	5120	7321	9986	12118	19253	23081	30015	33343	43215	51398
cv-value (gal/min) **trim A**	Δp max. 290 psi		-	-	-	-	-	-	-	-	4462	6370	9237	12483	15024	24013	29620	37978		55308	65269
cv-value (gal/min) **trim X**	Δp max. 754 psi		44	137	137	300	486	760	1680	2850	4314	5953	8513	11612	14091	22387	26838	31702	38771		59765
weight (standard)	(approx. kg)		8	16	16	22	32	39	68	128	150	221	319	349	457	715	1017	1203	1336	1744	2467

QUADAX® BUTTERFLY VALVE GATE VALVE REPLACEMENT

body details

butterfly valve:	bare shaft
pressure range:	PN 0-160 bar
orifice:	DN 80-1000 mm
connection:	flange
body materials:	carbon steel, stainless steel, special material (duplex, Inconel, bronze)
valve seat materials:	Inconel, others on request
seal materials:	graphite / stainless steel, Inconel, stainless steel, PTFE

⚠ The above-stated body materials refer only to the valve port connections that come in contact with the media!

details needed for a correct valve selection

- size
- pipe connection
- operating pressure
- flow rate
- Δp
- closing time
- media
- process temperature
- outside temperature

⚠

The valves' technical design is based on media and application requirements. This can lead to deviations from the general specifications shown on the data sheet with regards to the design, sealing materials and characteristics.

⚠

If order or application specifications are incomplete or imprecise there exists the risk of an incorrect technical design of the valve for the required application. As a consequence, the physical and / or chemical properties of the materials or seals used, may not be suitable for the intended application.

general specifications

ports	flange	PN 10 / 16 / 25 / 40 / 63 / 100 / 160
		ANSI 150 / 300 / 600 / 900
function	NC / NO / DA	depending upon actuator
pressure range	body pressure	0 to 160 bar
	Δp standard shaft	52 bar in both directions
	Δp optional shaft	100 bar in both directions
Kv value	m³/h	see table
leakage rate		1 DIN 3230
		A DIN EN 12266
		BS 6364
		Fire-safe
flow direction	A → B	as marked
switching time	s	DN/100
process- and outside temperature	standard	-10 °C to +450 °C
	with special materials	-270 °C to +800 °C
limit switches		option
approvals		PED / Fire-safe / BAM / TA Luft / ATEX in further
weight	kg	see table
additional equipment		upon request

Kv-curve

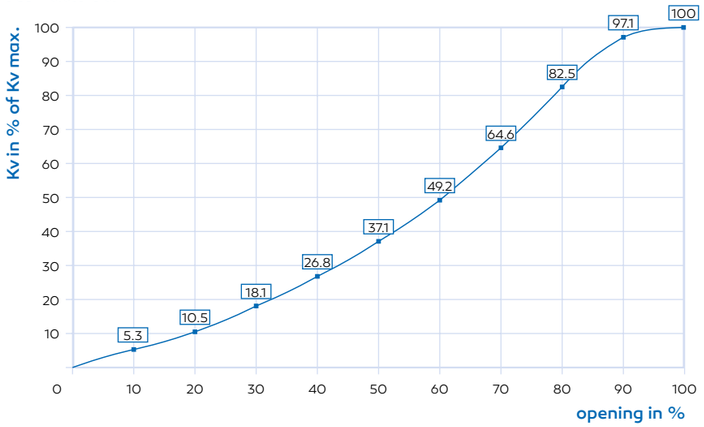

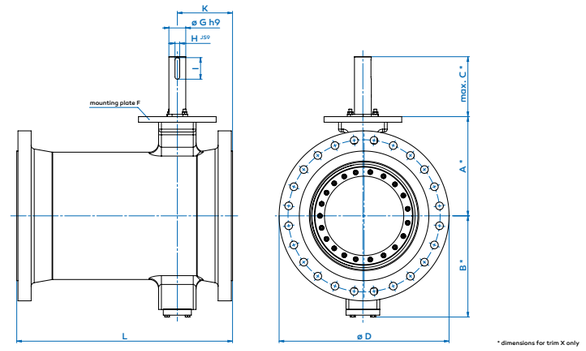

dimensions

size	(mm)		**80**	**100**	**125**	**150**	**200**	**250**	**300**	**350**	**400**	**450**	**500**	**600**	**700**	**750**	**800**	**900**	**1000**
	(inches)		**3**	**4**	**5**	**6**	**8**	**10**	**12**	**14**	**16**	**18**	**20**	**24**	**28**	**30**	**32**	**36**	**40**
pipe cl to mounting plate		**A**	128	162	190	203	240	279	305	325	385	405	440	530	630	630	700	830	920
pipe cl to cover screws		**B**	129	158	186	204	241	281	307	333	383	403	441	541	643	643	713	836	926
bare shaft length for direct mounting		**C**	95	125	135	145	180	180	180	280	289	300	320	320	367	367	367	398	398
bare shaft length for adapter		**C**	51	68	68	68	85	85	85	173	170	170	170	170	210	-	-	-	-
flange diameter	PN 10	**D**	200	230	250	295	352	405	455	515	565	615	670	780	895	970	1085	1115	1230
	PN 16	**D**	200	230	250	295	352	405	455	515	590	640	725	845	910	970	1085	1125	1255
	PN 25	**D**	200	230	270	295	352	425	485	550	620	680	725	845	960	1020	1085	1185	1320
	PN 40	**D**	200	230	270	295	375	450	515	585	660	680	770	908	-	-	-	-	-
	PN 63	**D**	215	250	295	345	415	470	530	600	670	-	-	-	-	-	-	-	-
	PN 100	**D**	230	265	315	355	430	505	585	655	-	-	-	-	-	-	-	-	-
	PN 160	**D**	230	265	315	355	430	515	585	-	-	-	-	-	-	-	-	-	-
	ANSI 150	**D**	190	230	-	280	352	405	485	550	590	640	700	815	927	984	1085	1168	1290
	ANSI 300	**D**	210	254	-	320	380	445	515	585	660	710	770	908	1035	1092	1149	1270	1238
	ANSI 600	**D**	210	275	-	355	420	508	560	605	685	745	815	940	1073	1130	1194	1315	1320
mounting plate F ISO 5211	(others on request)	**F**	F07	F10	F12	F14	F16	F16	F16	F25	F30	F30	F35	F35	F40	F40	F40	F48	F48
trim A	20 bar max.	**G**	-	-	-	-	-	-	40	45	50	55	55	70	90	90	100	110	120
	290 psi max.	**H**	-	-	-	-	-	-	12	14	14	16	16	20	25	25	28	32	32
		I	-	-	-	-	-	-	45	60	60	80	80	90	115	115	125	140	160
trim X (standard)	52 bar max.	**G**	18	20	22	32	32	40	45	55	65	70	75	90	110	110	130	150	160
	754 psi max.	**H**	6	6	6	10	10	12	14	16	18	20	20	25	32	32	32	36	40
		I	28	28	40	40	40	45	60	80	88	90	90	115	140	140	180	180	200
trim B	104 bar max.	**G**	-	-	-	-	45	55	65	75	90	95	110	130	150	150	180	190	220
	1500 psi max.	**H**	-	-	-	-	14	16	18	20	25	25	32	32	36	36	45	45	50
		I	-	-	-	-	60	80	88	90	115	125	140	180	180	180	220	250	280
trim C	155 bar max.	**G**	20	28	32	40	50	65	75	90	110	110	130	150	170	170	200	230	250
	2250 psi max.	**H**	6	8	10	12	14	18	20	25	32	32	32	36	40	40	45	50	56
		I	28	40	40	45	60	88	90	115	140	140	180	180	200	200	240	280	320
ANSI B 16.10	ANSI 150	**K**	101	114	-	125	134	151	168	176	190	216	228	254	305	305	330	355	-
		L	203	229	-	267	292	330	356	381	406	432	457	508	610	610	660	711	-
	ANSI 300	**K**	102	110	-	125	134	151	168	176	190	217	240	290	345	375	395	445	-
		L	282	305	-	403	419	457	502	762	838	914	991	1143	1346	1397	1524	1727	-
	ANSI 600	**K**	112	126	-	153	165	181	194	207	218	240	251	299	345	375	395	445	-
		L	356	432	-	559	660	787	838	889	991	1092	1194	1397	1549	1651	1778	2083	-
Kv-value (m³/h)	**trim A**	Δp max. 20 bar		-	-	-	-	-	-	3837	5478	7944	10735	12921	20651	25473	32661	36123	47565	56131
	trim X	Δp max. 52 bar		118	258	418	654	1445	2451	3720	5120	7321	9986	12118	19253	23081	30015	33343	43215	51398
	trim B	Δp max. 104 bar		-	-	-	-	1254	2123	3180	4459	6282	8738	10245	16458	19826	22286	28632	38954	44444
	trim C	Δp max. 155 bar		101	208	344	576	1164	1916	2926	3962	5659	7989	9442	15002	18231	21026	26779	34693	40870
cv-value (gal/min)	**trim A**	Δp max. 290 psi		-	-	-	-	-	-	4462	6370	9237	12483	15024	24013	29620	37978	42003	55308	65269
	trim X	Δp max. 754 psi		137	300	486	760	1680	2850	4314	5953	8513	11612	14091	22387	26838	31702	38771	50250	59765
	trim B	Δp max. 1500 psi		-	-	-	-	1458	2469	3698	5185	7305	10160	11913	19137	23053	25914	33293	45295	51679
	trim C	Δp max. 2250 psi		117	242	400	670	1353	2228	3402	4607	6580	9290	10979	17444	21199	24658	31138	40341	47523
weight (standard)		(approx. kg)		22	30	42	52	92	118	196	287	378	494	602	823	944	1082	1240	1480	1610

QUADAX® BUTTERFLY VALVE BUTTWELD VERSION

body details

butterfly valve:	bare shaft
pressure range:	PN 0-160 bar
orifice:	DN 80-1000 mm
connection:	buttweld ends
body materials:	carbon steel, stainless steel, special material (duplex, Inconel)
valve seat materials:	Inconel, others on request
seal materials:	graphite / stainless steel, Inconel, stainless steel, PTFE

⚠ The above-stated body materials refer only to the valve port connections that come in contact with the media!

details needed for a correct valve selection

- size
- pipe connection
- operating pressure
- flow rate
- Δp
- closing time
- media
- process temperature
- outside temperature

⚠

The valves' technical design is based on media and application requirements. This can lead to deviations from the general specifications shown on the data sheet with regards to the design, sealing materials and characteristics.

⚠

If order or application specifications are incomplete or imprecise there exists the risk of an incorrect technical design of the valve for the required application. As a consequence, the physical and / or chemical properties of the materials or seals used, may not be suitable for the intended application.

general specifications

ports	buttweld ends	
function	NC / NO / DA	depending upon actuator
pressure range	body pressure	0 to 160 bar
	Δp standard shaft	52 bar in both directions
	Δp optional shaft	100 bar in both directions
Kv value	m³/h	see table
leakage rate		1 DIN 3230
		A DIN EN 12266
		BS 6364
		Fire-safe
flow direction	A → B	as marked
switching time	s	DN/100
process- and outside temperature	standard	-10 °C to +450 °C
	with special materials	-270 °C to +800 °C
limit switches		option
approvals		PED / Fire-safe / BAM / TA Luft / ATEX in further
weight	kg	see table
additional equipment		upon request

Kv-curve

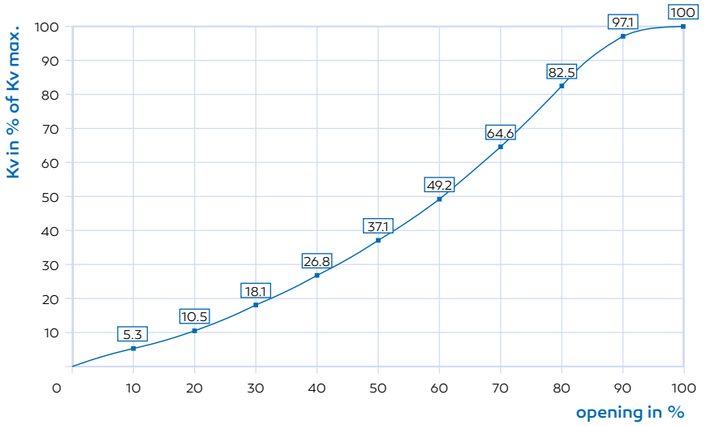

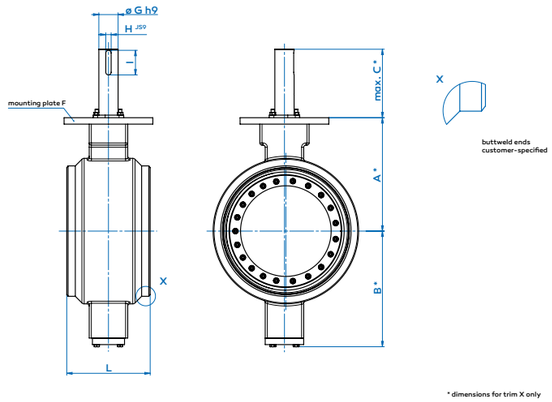

dimensions

size			80	100	125	150	200	250	300	350	400	450	500	600	700	750	800	900	1000
	(mm)		80	100	125	150	200	250	300	350	400	450	500	600	700	750	800	900	1000
	(inches)		3	4	5	6	8	10	12	14	16	18	20	24	28	30	32	36	40
pipe cl to mounting plate		A	128	162	190	203	240	279	305	325	385	405	440	530	630	630	700	830	920
pipe cl to cover screws		B	129	158	186	204	241	281	307	333	383	403	441	541	643	643	713	836	926
bare shaft length for direct mounting		C	95	125	135	145	180	180	180	280	289	300	320	320	367	367	367	398	398
bare shaft length for adapter		C	51	68	68	68	85	85	85	173	170	170	170	170	210	-	-	-	-
mounting plate F ISO 5211	(others on request)	F	F07	F10	F12	F14	F16	F16	F16	F25	F30	F30	F35	F35	F40	F40	F40	F48	F48
trim A	20 bar max.	G	-	-	-	-	-	-	40	45	50	55	55	70	90	90	100	110	120
	290 psi max.	H	-	-	-	-	-	-	12	14	14	16	16	20	25	25	28	32	32
		I	-	-	-	-	-	-	45	60	60	80	80	90	115	115	125	140	160
trim X (standard)	52 bar max.	G	18	20	22	32	32	40	45	55	65	70	75	90	110	110	130	150	160
	754 psi max.	H	6	6	6	10	10	12	14	16	18	20	20	25	32	32	32	36	40
		I	28	28	40	40	40	45	60	80	88	90	90	115	140	140	180	180	200
trim B	104 bar max.	G	-	-	-	-	45	55	65	75	90	95	110	130	150	150	180	190	220
	1500 psi max.	H	-	-	-	-	14	16	18	20	25	25	32	32	36	36	45	45	50
		I	-	-	-	-	60	80	88	90	115	125	140	180	180	180	220	250	280
trim C	155 bar max.	G	20	28	32	40	50	65	75	90	110	110	130	150	170	170	200	230	250
	2250 psi max.	H	6	8	10	12	14	18	20	25	32	32	32	36	40	40	45	50	56
		I	28	40	40	45	60	88	90	115	140	140	180	180	200	200	240	280	320
DIN 3202 F4		L	180	190	200	210	230	250	270	290	310	330	350	390	430	470	470	510	550
Kv-value (m³/h)	**trim A**	Δp max. 20 bar	-	-	-	-	-	-	3837	5478	7944	10735	12921	20651	25473	32661	36123	47565	56131
	trim X	Δp max. 52 bar	118	258	418	654	1445	2451	3720	5120	7321	9986	12118	19253	23081	30015	33343	43215	51398
	trim B	Δp max. 104 bar	-	-	-	-	1254	2123	3180	4459	6282	8738	10245	16458	19826	22286	28632	38954	44444
	trim C	Δp max. 155 bar	101	208	344	576	1164	1916	2926	3962	5659	7989	9442	15002	18231	21026	26779	34693	40870
cv-value (gal/min)	**trim A**	Δp max. 290 psi	-	-	-	-	-	-	4462	6370	9237	12483	15024	24013	29620	37978	42003	55308	65269
	trim X	Δp max. 754 psi	137	300	486	760	1680	2850	4314	5953	8513	11612	14091	22387	26838	31702	38771	50250	59765
	trim B	Δp max. 1500 psi	-	-	-	-	1458	2469	3698	5185	7305	10160	11913	19137	23053	25914	33293	45295	51679
	trim C	Δp max. 2250 psi	117	242	400	670	1353	2228	3402	4607	6580	9290	10979	17444	21199	24658	31138	40341	47523
weight (standard)		(approx. kg)	14	15	21	27	59	71	112	144	212	265	322	452	562	722	810	912	1010

QUADAX® BUTTERFLY VALVE BUTTWELD VERSION TOP ENTRY

body details

butterfly valve:	bare shaft
pressure range:	PN 0-160 bar
orifice:	DN 100-1000 mm
connection:	buttweld ends
body materials:	carbon steel, stainless steel, special material (duplex, Inconel)
valve seat materials:	Inconel, others on request
seal materials:	graphite / stainless steel, Inconel, stainless steel, PTFE

⚠ The above-stated body materials refer only to the valve port connections that come in contact with the media!

details needed for a correct valve selection

- size
- pipe connection
- operating pressure
- flow rate
- Δp
- closing time
- media
- process temperature
- outside temperature

⚠

The valves' technical design is based on media and application requirements. This can lead to deviations from the general specifications shown on the data sheet with regards to the design, sealing materials and characteristics.

⚠

If order or application specifications are incomplete or imprecise there exists the risk of an incorrect technical design of the valve for the required application. As a consequence, the physical and / or chemical properties of the materials or seals used, may not be suitable for the intended application.

general specifications

ports	buttweld ends	PN 10/16/25/40/63/100/160
		ANSI 150/300/600/900
function	NC / NO / DA	depending upon actuator
pressure range	body pressure	0 to 160 bar
	Δp standard shaft	52 bar in both directions
	Δp optional shaft	100 bar in both directions
Kv value	m³/h	see table
leakage rate		1 DIN 3230
		A DIN EN 12266
		BS 6364
		Fire-safe
flow direction	A → B	as marked
switching time	s	DN/100
process- and outside temperature	standard	-10 °C to +450 °C
	with special materials	-270 °C to +800 °C
limit switches		option
approvals		PED / Fire-safe / BAM / TA Luft / ATEX in further
weight	kg	upon request
additional equipment		upon request

Kv-curve

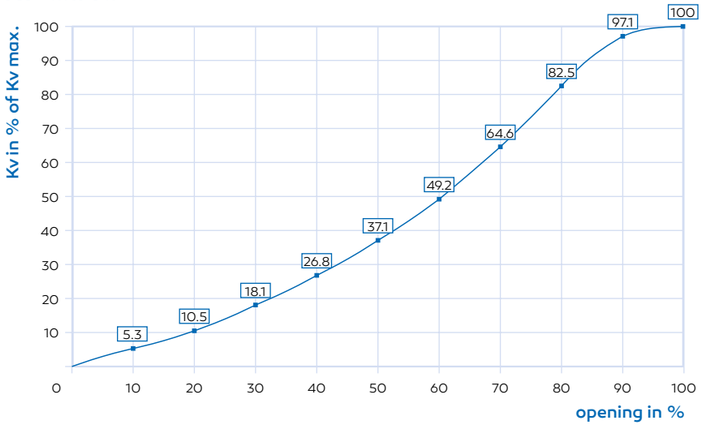

Quadax® butterfly valve
BUTTWELD VERSION TOP ENTRY

- Pipeline construction (LNG)
- Maintenance and repair work in installed position
- Reduced risk of unnoticed leakages

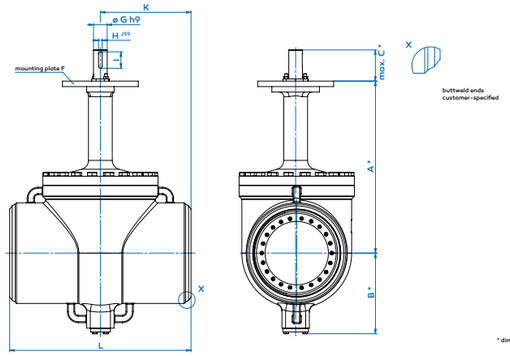

dimensions

			100	125	150	200	250	300	350	400	450	500	600	700	750	800	900	1000
size	(mm)		**100**	**125**	**150**	**200**	**250**	**300**	**350**	**400**	**450**	**500**	**600**	**700**	**750**	**800**	**900**	**1000**
	(inches)		**4**	**5**	**6**	**8**	**10**	**12**	**14**	**16**	**18**	**20**	**24**	**28**	**30**	**32**	**36**	**40**
pipe cl to mounting plate		**A**	662	690	703	740	779	805	825	885	905	940	1030	1130	1130	1200	1330	1420
pipe cl to cover screws		**B**	158	186	204	241	281	307	333	383	403	441	541	643	643	713	836	926
bare shaft length for direct mounting		**C**	125	135	145	180	180	180	280	289	300	320	320	367	367	367	398	398
bare shaft length for adapter		**C**	68	68	68	85	85	85	173	170	170	170	170	210	-	-	-	-
mounting plate F ISO 5211	(others on request)	**F**	F10	F12	F14	F16	F16	F16	F25	F30	F30	F35	F35	F40	F40	F40	F48	F48
trim A	20 bar max.	**G**	-	-	-	-	-	40	45	50	55	55	70	90	90	100	110	120
	290 psi max.	**H**	-	-	-	-	-	12	14	14	16	16	20	25	25	28	32	32
		I	-	-	-	-	-	45	60	60	80	80	90	115	115	125	140	160
trim X (standard)	52 bar max.	**G**	20	22	32	32	40	45	55	65	70	75	90	110	110	130	150	160
	754 psi max.	**H**	6	6	10	10	12	14	16	18	20	20	25	32	32	32	36	40
		I	28	40	40	40	45	60	80	88	90	90	115	140	140	180	180	200
trim B	104 bar max.	**G**	-	-	-	45	55	65	75	90	95	110	130	150	150	180	190	220
	1500 psi max.	**H**	-	-	-	14	16	18	20	25	25	32	32	36	36	45	45	50
		I	-	-	-	60	80	88	90	115	125	140	180	180	180	220	250	280
trim C	155 bar max.	**G**	28	32	40	50	65	75	90	110	110	130	150	170	170	200	230	250
	2250 psi max.	**H**	8	10	12	14	18	20	25	32	32	32	36	40	40	45	50	56
		I	40	40	45	60	88	90	115	140	140	180	180	200	200	240	280	320
ANSI B 16.10	ANSI 300	**L**	305	381	403	419	457	502	762	838	914	991	1143	1346	1397	1524	1727	-
Kv-value (m³/h)	**trim A**	Δp max. 20 bar	-	-	-	-	-	3837	5478	7944	10735	12921	20651	25473	32661	36123	47565	56131
	trim X	Δp max. 52 bar	258	418	654	1445	2451	3720	5120	7321	9986	12118	19253	23081	30015	33343	43215	51398
	trim B	Δp max. 104 bar	-	-	-	1254	2123	3180	4459	6282	8738	10245	16458	19826	22286	28632	38954	44444
	trim C	Δp max. 155 bar	208	344	576	1164	1916	2926	3962	5659	7989	9442	15002	18231	21026	26779	34693	40870
cv-value (gal/min)	**trim A**	Δp max. 290 psi	-	-	-	-	-	4462	6370	9237	12483	15024	24013	29620	37978	42003	55308	65269
	trim X	Δp max. 754 psi	300	486	760	1680	2850	4314	5953	8513	11612	14091	22387	26838	31702	38771	50250	59765
	trim B	Δp max. 1500 psi	-	-	-	1458	2469	3698	5185	7305	10160	11913	19137	23053	25914	33293	45295	51679
	trim C	Δp max. 2250 psi	242	400	670	1353	2228	3402	4607	6580	9290	10979	17444	21199	24658	31138	40341	47523
weight (standard)	(approx. kg)		upon request															

PRECISION: THE BASIS OF OUR WORK

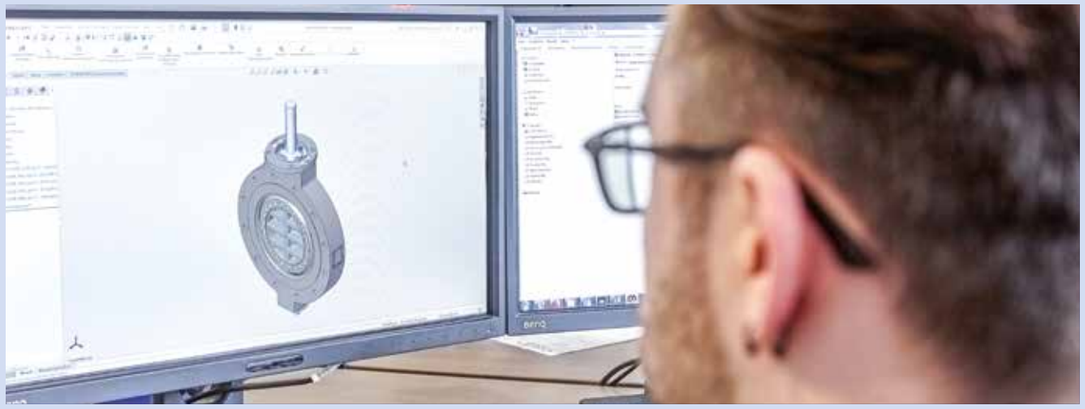

WE TAKE QUALITY SERIOUSLY

Quality is part of our philosophy, which is not only shared but also practised by each individual employee. Our experienced and well-trained staff always ensure that the highest standards of quality and reliability are achieved. These demands are dictated by the extreme applications in which our butterfly valves are used so successfully.

Our customers can rest assured that they will always receive a product that does not make any compromises regarding functionality, durability and reliability. We deliver solutions that surpass expectations: only products that have undergone and passed a 100% quality inspection leave our production.

We offer our customers quality and expertise.
This is proven not only by our successfully deployed products, but also confirmed by our full range of certificates.

Precision work

Final quality check

High inventory for short deliveries

RECOGNITION: THE RESULT OF OUR WORK

CERTIFICATIONS / STANDARDS

- **TÜV SÜD** ISO 9001:2015
- **CE** 0036 Certification
- **ISO** 15848 / **TA-Luft**
- **Fire-Safe in acc. with** ISO 10497, API 607, BS 6755
- **BAM** Certification
- **EAC** Certification
- **AD** 2000 A4, ADW 10 HPO
- **ANSI** 16.34
- **PED** 2014/68/EU
- **Leakage rate A** EN12266 / API 598
- **SIL 3**
- **DNV Type** Approval

QUADAX® PRODUCTS MADE FOR THE EXTREME!

HIGH-TEMPERATURE APPLICATIONS

APPLICATIONS

In chemical applications we often face high temperatures and high temperature differences within a very short time. One of our international customers was faced with such an extreme application, where all the traditional TOVs used, failed.

The media is hydrogen and the temperature difference is from +450° C down to ambient within 20 minutes.

With our unique 4-offset valve design, the Quadax® is the best solution for our customers' demanding applications. The completely round sealing geometry with zero friction leads to the highest tightness and a very long service life.

CRYOGENIC APPLICATIONS / LOW TEMPERATURES

LOW TEMPERATURES

When it comes to temperatures below -162° C the industry talks about cryogenic applications. We find these temperatures in various applications such as air separation plants, chemical plants and LNG plants. With our Quadax® Butterfly valve Series, produced in Germany on modern 5 axis machining centres, we can deal with cryogenic applications.

Thanks to our four offset construction the Quadax® valve functions with a completely round seat and sealing geometry. This construction makes it possible to deal with these extreme temperatures. Even if material is shrinking and expanding due to extreme temperatures, the Quadax® keeps its promises of 100% tightness.

HIGHEST TIGHTNESS AND SAFETY IN THE APPLICATIONS THAT THE MARKET DEMANDS

APPLICATIONS

Thanks to its unique design, four offset construction and brand new manufacturing technology, Quadax® meets the highest tightness requirements, even in extreme pressure and temperature ranges.

This makes Quadax® butterfly valves ideal for use in the oil and gas industry, petrochemicals, cryogenics, refineries, LNG + LPG systems and many other applications.

PROVEN QUALITY / REFERENCES

With more than 20,000 valve installations globally - the Quadax® technology is completely proven. Even within the most demanding applications, i. e. extreme pressure or temperature ranges.

If you need more information please contact us for our global reference list or for specific references.

TECHNICAL GASES

LNG & LPG SYSTEMS

POWER GENERATION

LOW TEMPERATURES CRYOGENIC APPLICATIONS

THERMOSOLAR

PULP & PAPER

REFINERIES / PETROCHEMICALS

OXYGEN APPLICATIONS

DISTRICT HEATING

... and much more.

müller quadax GmbH
Im Kupfertal 52 | 74670 Forchtenberg, Germany
T.: +49 79 47 / 943 43-0 | F.: +49 79 47 / 943 43-29
mail. info@quadax.de | www.quadax.de

07/2019