müller co-ax group

GATE VALVE TAKE OUT (GVTO) FOR DISTRICT ENERGY APPLICATIONS

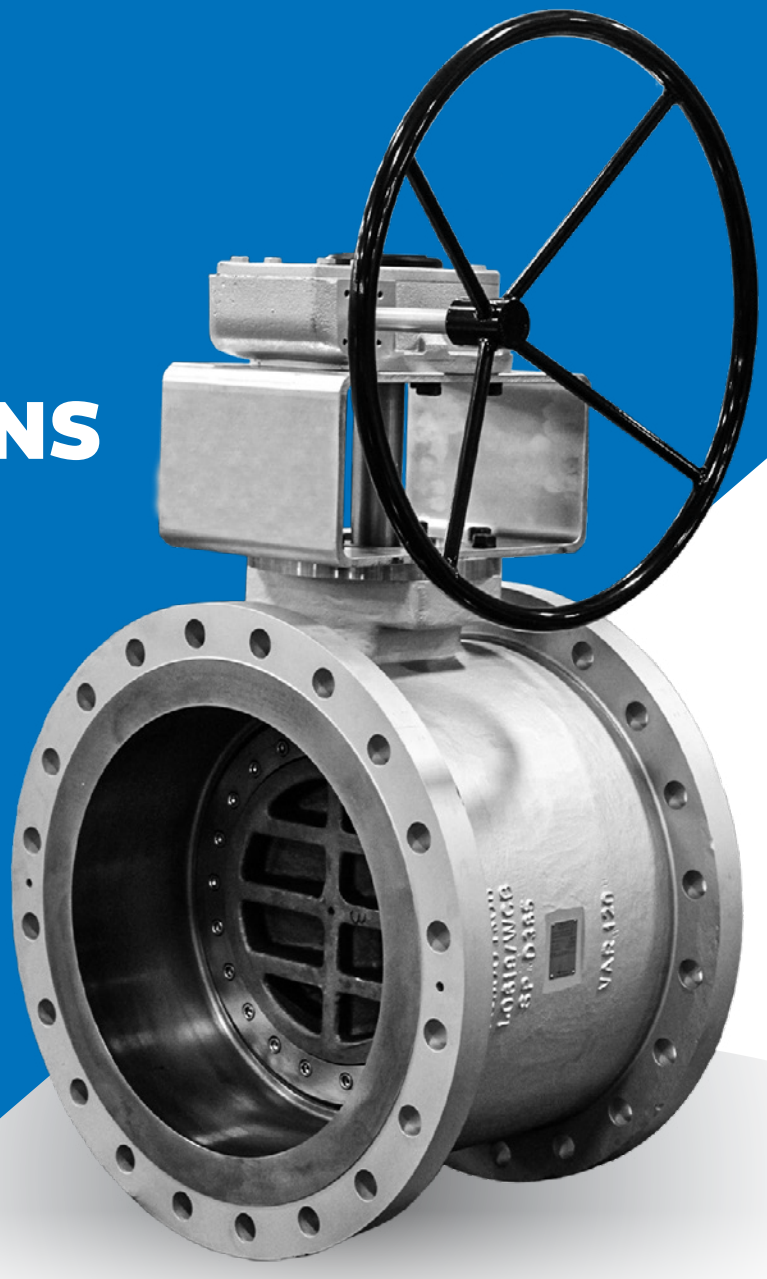

quadaxvalves.com

QUADAX® "GVTO" TORQUE SEATED VALVE

DIRECT REPLACEMENT FOR API 600 GATE VALVES PER ASME B16.10

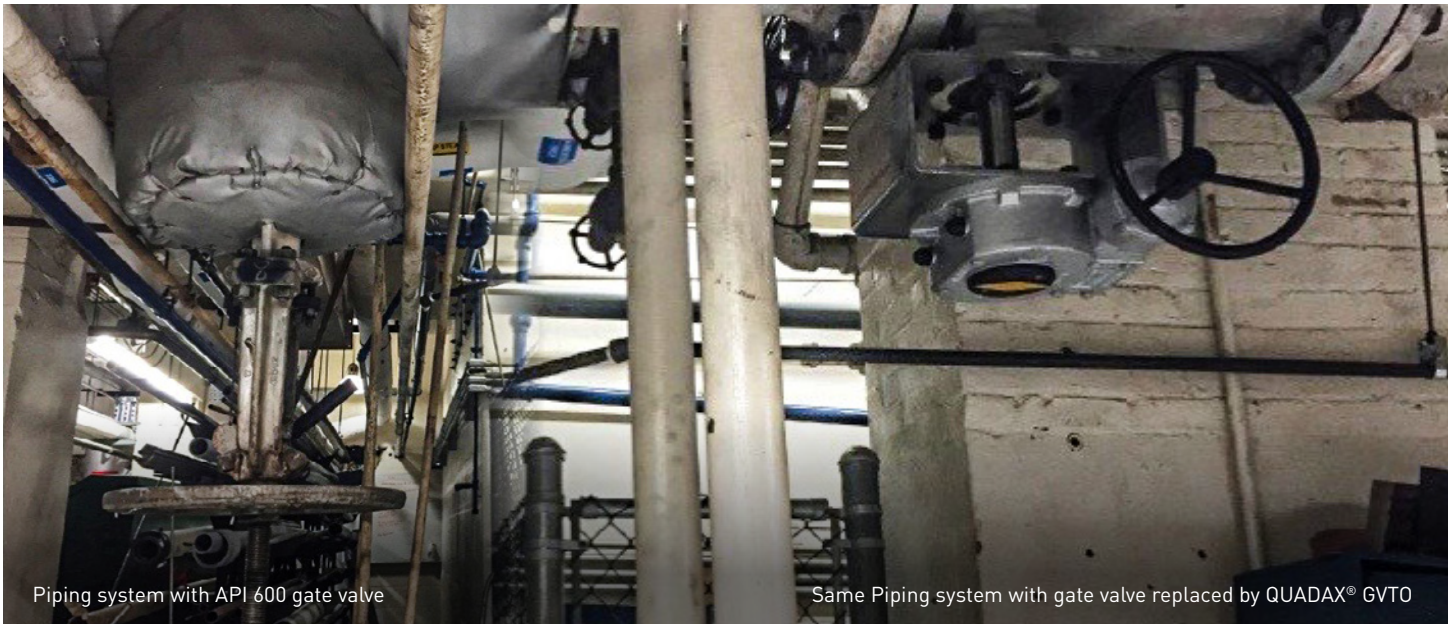

BENEFITS
QUADAX GVTO vs. GATE VALVE

- Better overall performance with ZERO LEAKAGE shut-off utilizing the latest in metal seated technology
- Savings in piping system's overall weight
- Compact design allowing space savings while providing the same 'face to face' as per ANSI 16.10 (same as API 600 or API 608 ball valves)
  - Allows for more work space in confined work environments- i.e. tunnels & manholes
  - Less surface area resulting in less radiant heat loss - easier to insulate
- ISO 5211 mounting pad
- Lower overall installation costs
- Quarter turn torque seated design provides better sealing capabilities - "Peace of Mind" for Operators

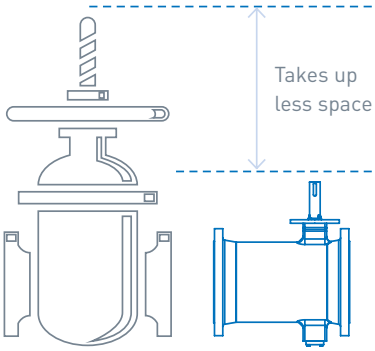

ADVANTAGES
QUADAX GVTO vs. GATE VALVE

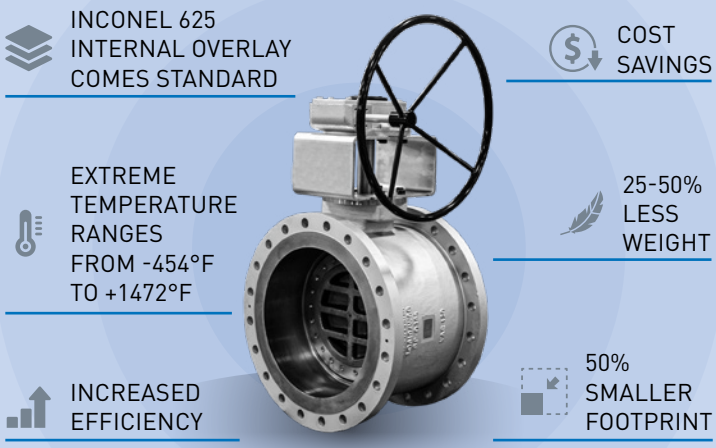

DATA SHEET QUADAX® -

GATE VALVE REPLACEMENT

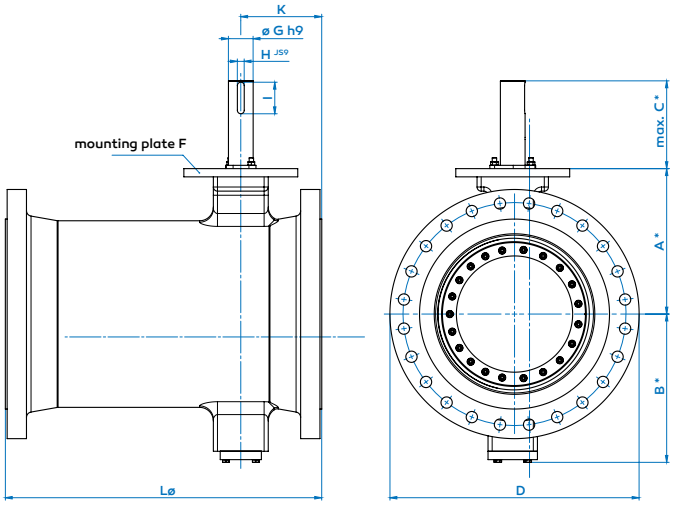

* dimensions for trim X only

Body details

butterfly valve:	bare shaft
pressure range:	0-2320 psi
orifice:	NPS 3-40
connection:	flange
body materials:	carbon steel with Inconel internal overlay, stainless steel, special material (duplex, Inconel, bronze)
valve seat materials:	Inconel , others on request
seal materials:	graphite / stainless steel, Inconel, stainless steel, PTFE

Above stated body materials refer to the valve port connections that get in contact with the media only!

Dimensions

size		(mm)		80	100	125	150	200	250	300	350	400	450	500	600	700	750	800	900	1000
		(inch)		3	4	5	6	8	10	12	14	16	18	20	24	28	30	32	36	40
pipe cl to mounting plate			**A**	5.04	6.38	7.48	7.99	9.45	10.98	12.01	12.80	15.16	15.94	17.32	20.87	24.80	24.80	27.56	32.68	36.22
pipe cl to cover screws			**B**	5.08	6.22	7.32	8.03	9.49	11.06	12.09	13.11	15.08	15.87	17.36	21.30	25.31	25.31	28.07	32.91	36.46
bare shaft length for direct mounting			**C**	3.74	4.92	5.31	5.71	7.09	7.09	7.09	11.02	11.38	11.81	12.60	12.60	14.45	14.45	14.45	15.67	15.67
bare shaft length for dapter			**C**	2.01	2.68	2.68	2.68	3.35	3.35	3.35	6.81	6.69	6.69	6.69	6.69	8.27	—	—	—	—
flange diameter		ANSI 150	**D**	7.48	9.06	—	11.02	13.86	15.94	19.09	21.65	23.23	25.20	27.56	32.09	36.50	38.74	42.72	45.98	50.79
		ANSI 300	**D**	8.27	10.00	—	12.60	14.96	17.52	20.28	23.03	25.98	27.95	30.31	35.75	40.75	42.99	45.24	50	48.74
		ANSI 600	**D**	8.27	10.83	—	13.98	16.54	20	22.05	23.82	26.97	29.33	32.09	37.01	42.24	44.09	47.01	51.77	51.97
mounting plate F ISO 5211		(others on request)	**F**	F07	F10	F12	F14	F16	F16	F16	F25	F30	F30	F35	F35	F40	F40	F40	F48	F48
trim A		290 psi max.	**G**	—	—	—	—	—	—	1.57	1.77	1.97	2.17	2.17	2.76	3.54	3.54	3.94	4.33	4.72
			H	—	—	—	—	—	—	0.47	0.55	0.55	0.63	0.63	0.79	0.98	0.98	1.10	1.26	1.26
			I	—	—	—	—	—	—	1.77	2.36	2.36	3.15	3.15	3.54	4.53	4.53	4.92	5.51	6.30
trim X (standard)		754 psi max.	**G**	0.71	0.79	0.87	1.26	1.26	1.57	1.77	2.17	2.56	2.76	2.95	3.54	4.33	4.33	5.12	5.91	6.30
			H	0.24	0.24	0.24	0.39	0.39	0.47	0.55	0.63	0.71	0.79	0.79	0.98	1.26	1.26	1.26	1.42	1.57
			I	1.10	1.10	1.57	1.57	1.57	1.77	2.36	3.15	3.46	3.54	3.54	4.53	5.51	5.51	7.09	7.09	7.87
trim B		1500 psi max.	**G**	—	—	—	—	1.77	2.17	2.56	2.95	3.54	3.74	4.33	5.12	5.91	5.91	7.09	7.48	8.66
			H	—	—	—	—	0.55	0.63	0.71	0.79	0.98	0.98	1.26	1.26	1.42	1.42	1.77	1.77	1.97
			I	—	—	—	—	2.36	3.15	3.46	3.54	115	4.92	5.51	7.09	7.09	7.09	8.66	9.84	11.02
trim C		2250 psi max.	**G**	0.79	1.10	1.26	1.57	1.97	2.56	2.95	3.54	4.33	5.12	5.12	5.91	6.69	6.69	7.87	9.06	9.84
			H	0.24	0.31	0.39	0.47	0.55	0.71	0.79	0.98	1.26	1.26	1.26	1.42	1.57	1.77	1.77	1.97	2.20
			I	1.10	1.57	1.57	1.77	2.36	3.46	3.54	4.53	5.51	5.51	7.09	7.09	7.87	7.87	9.45	11.02	12.60
ANSI B 16.10		ANSI 150	**K**	3.98	4.49	—	4.92	5.28	5.94	6.61	6.93	7.48	8.50	8.98	10.00	12.01	12.01	12.99	13.98	—
			L	7.99	9.02	—	10.51	11.50	12.99	14.02	15.00	15.98	17.01	17.99	20.00	24.02	24.02	25.98	27.99	—
		ANSI 300	**K**	4.02	4.33	—	4.92	5.28	5.94	6.61	6.93	7.48	8.54	9.45	11.42	13.58	14.76	15.55	17.52	—
			L	11.10	12.01	—	15.87	16.50	17.99	19.76	30.0	32.99	35.98	39.02	45.00	52.99	55.00	60.00	67.99	—
		ANSI 600	**K**	4.41	4.96	—	6.02	6.50	7.13	7.64	8.15	8.58	9.45	9.88	11.77	13.58	14.76	15.55	17.52	—
			L	14.02	17.01	—	22.01	25.98	30.98	32.99	35.00	39.02	42.99	47.01	55.00	60.98	65.00	70.00	82.01	—
cv-value (gal/min)	**trim A**	Δp max. 290 psi		—	—	—	—	—	—	4462	6370	9237	12483	15024	24013	29620	37978	42003	55308	65269
	trim X	Δp max. 754 psi		137	300	486	760	1680	2850	4314	5953	8513	11612	14091	22387	26838	31702	38771	50250	59765
	trim B	Δp max. 1500 psi		—	—	—	—	1458	2469	3698	5185	7305	10160	11913	19137	23053	25914	33293	45295	51679
	trim C	Δp max. 2250 psi		117	242	400	670	1353	2228	3402	4607	6580	9290	10979	17444	21199	24658	31138	40341	47523
weight (standard)		(approx. lb)		49	66	93	115	203	260	432	633	833	1089	1327	1814	2081	2385	2734	3263	3549

müller co-ax group

Quadax North America

1518 Grundy's Lane, Bristol, PA 19007, USA
T.: +1 (855) 578-2329 | F.: +1 (855) 678-2329 | sales@quadaxvalves.com
quadaxvalves.com

READY TO SHIP
IN STOCK
READY TO SHIP